2260 Series

O-Belt Pulley Conveyor Roller

Product Features

- The O-belt pulley is located the end of the roller which separates the drive area and the conveying area avoiding interference between the O-belt and the conveyed goods.
- The bearing end cap consists of a precision ball bearing, a polymer housing and end cap seal. Combined they provide an attractive, smooth and quite running roller.
- The design of the end cap protects the bearings by providing excellent resistance to dust and splashed water.
- Because there is no grooving of the tube, the tube will not have any distortion and the roller will run more smoothly.
- Standard configuration with anti-static design surface impedance≤ $10^6\Omega$。
- Temperature range: -5℃ ~ +40℃.
- Humidity range: 30%~ 90% RH (non-condensation).
  Please contact us if humidity out of this scope.

Specifications

Bearing unit	
Bearing housing	Polyamide, black
End cap	Polyproylene, Damon green
Precision ball bearing	6002
Drive Element	
O-belt pulley	Polyamide, black

About Conveying Duty

1.Duty is the maximum conveying capacity of driven roller (it's not roller's maximum load capacity) For more information about the load capacity , refer to the load capacity of 1200 series dia 50 roller on Page 27.

2.In driven conveying, duty plays a decisive role.

3.The duty capacity of the rollers depend on the drive method and drive capacity of the O-belt. Single items should not exceed 30kg.

Double Groove Pulley Drive

1.Simple arrangement. Easy installation and maintenance.

2.The driving torque deteriorates rapidly from roller to roller. Typically single MDR can only drive 7 to 8 rollers. The weight of single items to be conveyed should not exceed 30kg.

3.The preloading value is required for the length of O-belt loop. It may vary according to the different O-belt suppliers. Please check the specifications with the O-belt supplier. Typically, reduce the preloading value by 5% - 8% from the theoretical length of loop.

Double Groove Pulley Drive Layout:

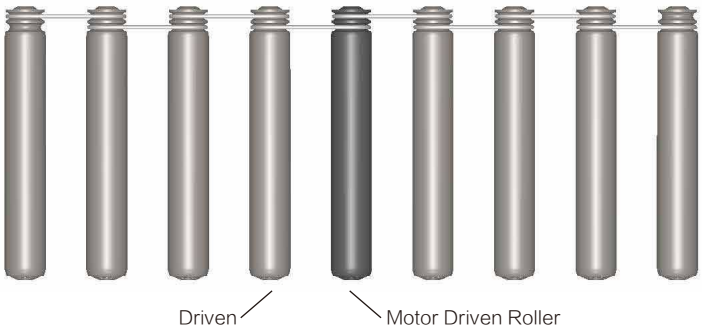

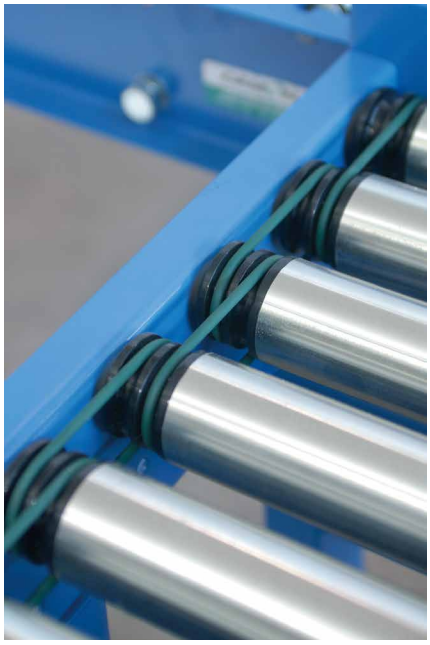

Different Series Layout:

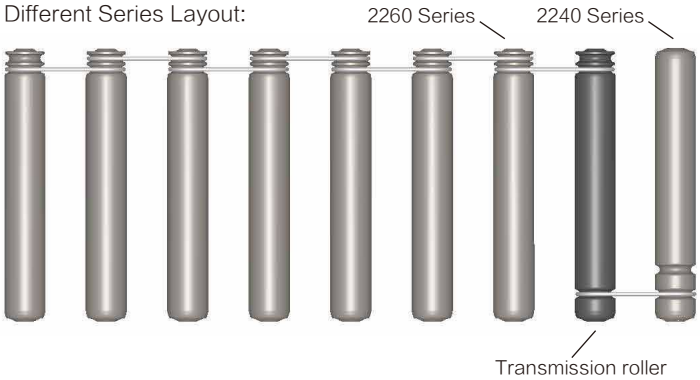

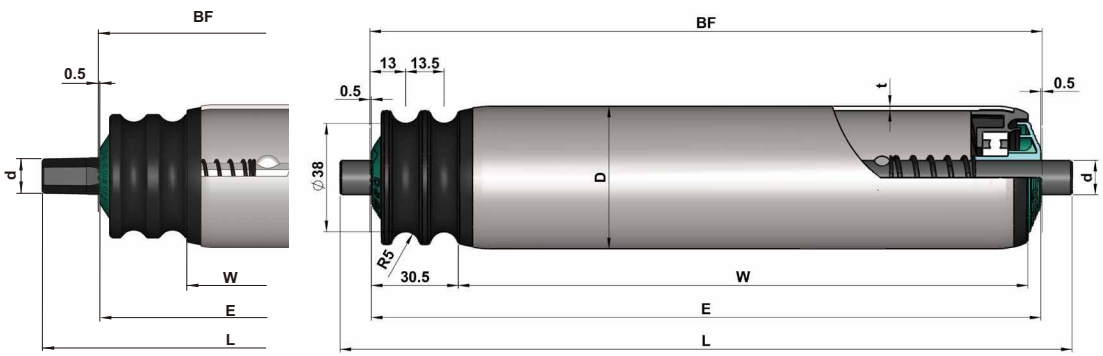

Polymer noiseless sleeve for shaft

2260 Series Spring Loaded

Tube Dia.(D)	Shaft Dia.(d)			
Φ50	Φ10/12/11hex	BF=W+36	E=W+35	L=W+57
	11hex Polymer noiseless sleeve for shaft	BF=W+36	E=W+35	L=W+75

Tube	Shaft Dia.(d)				
	D*T	Φ10	11hex	11hex Polymer noiseless sleeve for shaft	Φ12
Steel, zinc plated	Φ50x1.5	2.260.SHC.AMA	2.260.SHC.AFA	2.260.SHC.AHA	2.260.SHC.ACA
Steel, zinc plated with PVC sleeve (2mm)	Φ50x1.5	2.260.SHD.AMA	2.260.SHD.AFA	2.260.SHD.AHA	2.260.SHD.ACA
Stainless steel(304)	Φ50x1.5	2.260.NHC.BMA	2.260.NHC.BFA	2.260.NHC.AHA	2.260.NHC.BCA
Aluminium	Φ50x1.5	2.260.AHC.AMA	2.260.AHC.AFA	2.260.AHC.AHA	2.260.AHC.ACA

Φ50 rollers can be fitted with PU(2mm).

⚠ Polymer noiseless sleeve for shaft roller：

① Actual frame width= E+（1~3）mm，Excessive width inside the frame will damage the shaft core and roller

② Applicable mounting hole range：11.2~11.7mm（edge to edge）

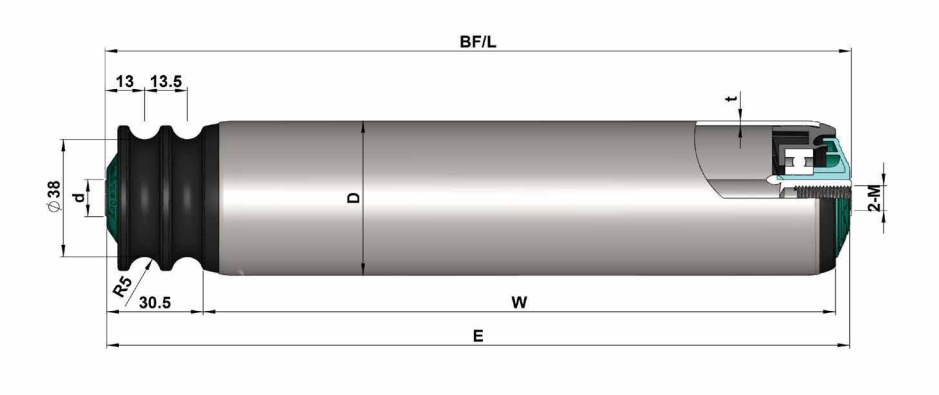

2260 Series Internal Thread

Tube Dia.(D)	Shaft Dia.(d)			
Φ50	Φ14/15	BF=W+36	E=W+35	L=W+36

Tube	D*T	Shaft Dia.(d)	
		Φ14 (M8)	Φ15 (M10x20)
Steel, zinc plated	Φ50x1.5	2.260.SHC.BLC	2.260.SHC.ADC
Steel, zinc plated with PVC sleeve (2mm)	Φ50x1.5	2.260.SHD.BLC	2.260.SHD.ADC
Stainless steel(304)	Φ50x1.5	2.260.NHC.BLC	2.260.NHC.BDC
Aluminium	Φ50x1.5	2.260.AHC.BLC	2.260.AHC.ADC

Φ50 rollers can be fitted with PU(2mm).